PUC 2X3 EXTERIOR

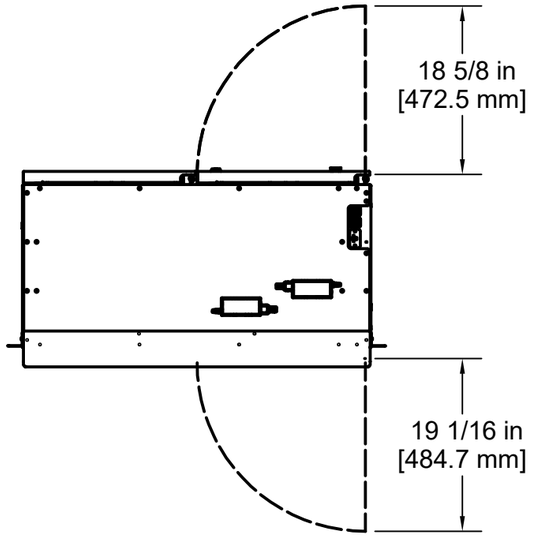

CUSTOMER

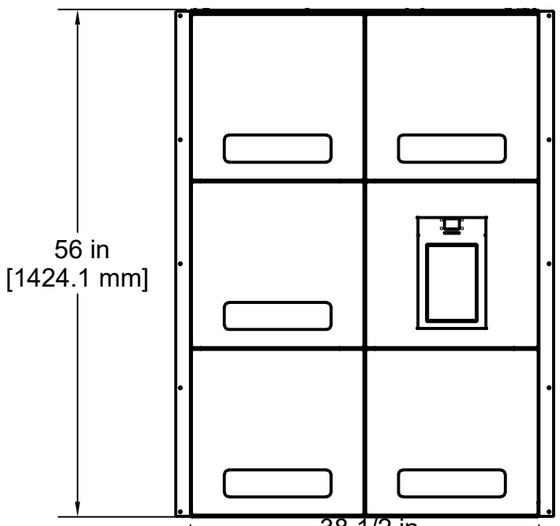

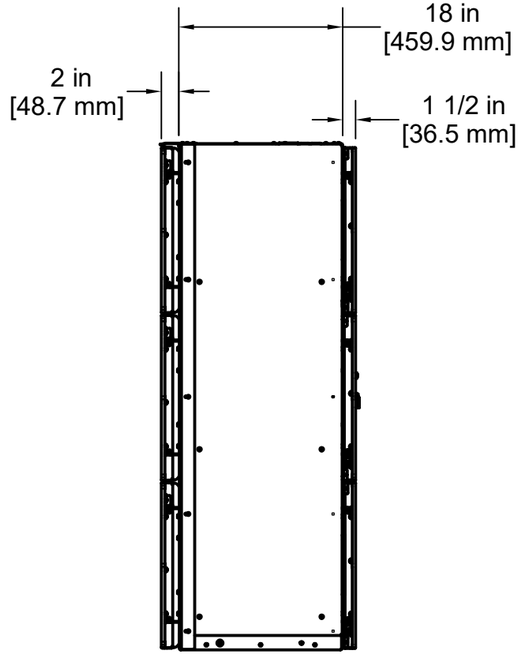

CREW

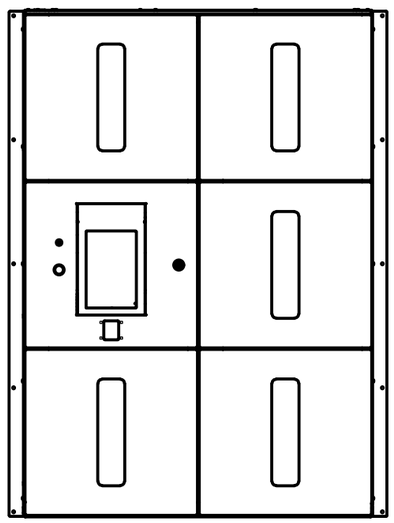

DOYON & NU-VU BAKING EQUIPMENT SPECIALISTS www.doyon.qc.ca • www.nu-vu.com	REV.	DESCRIPTION	CHANGED BY	DRAWN BY: larft	MATERIAL:	NAME:	
	A1			CHECKED:	B/A:		
			DATE	DATE: 10/7/2026	SHEAR: N/A X N/A	USED ON:	
				SCALE: 1 / 17	SQUARE INCHES: N/A	SIZE: B	DWG. NO. / SHEET: 2 of 2
	NOTES: 1. () INDICATES REFERENCE DIMENSION. 2. ALL TOLERANCES ± .030 UNLESS OTHERWISE SPECIFIED				QTY. REQ'D:		

THIS DRAWING CONTAINS INFORMATION CONFIDENTIAL TO NU-VU Food Service Systems. NO REPRODUCTION OR DISCLOSURE OF ITS CONTENTS IS PERMITTED

M:\Lilya\PUC 2 X 3.idw

PUC 2X3 INDOOR

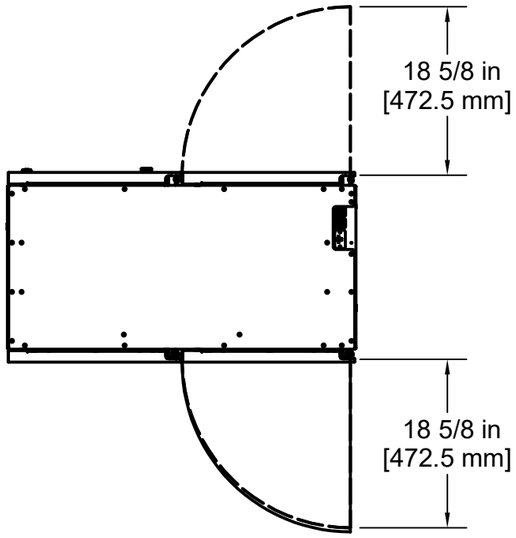

CUSTOMER

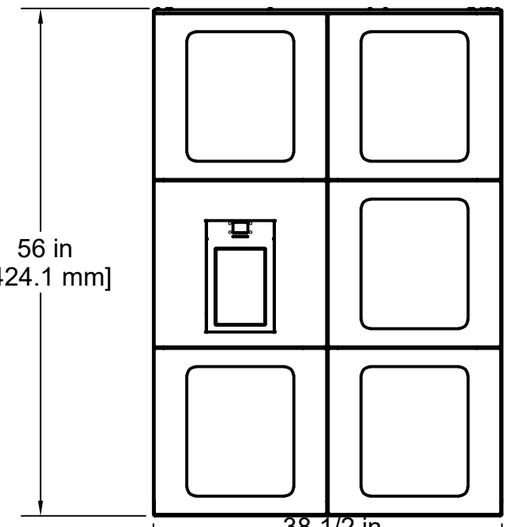

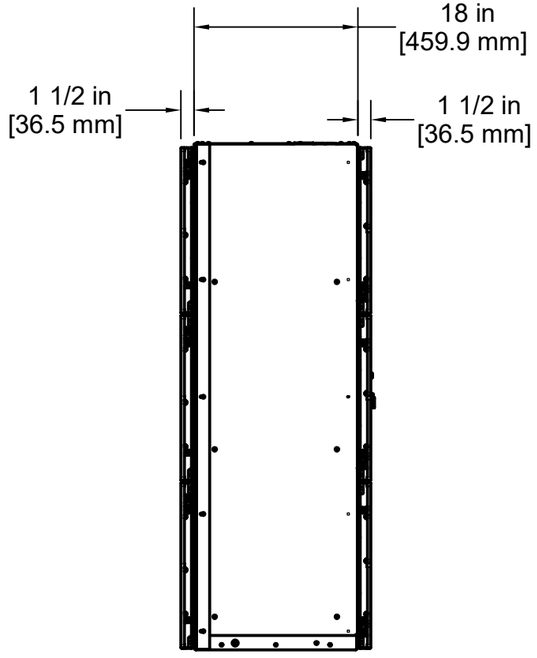

CREW

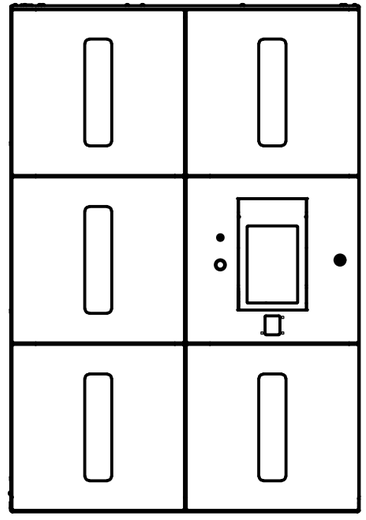

DOYON & NU-VU BAKING EQUIPMENT SPECIALISTS www.doyon.qc.ca • www.nu-vu.com	REV.	DESCRIPTION	CHANGED BY	DRAWN BY: larft	MATERIAL:	NAME:
	A1			CHECKED:	B/A:	
			DATE	DATE: 10/7/2026	SHEAR: N/A X N/A	USED ON:
				SCALE: 1 / 17	SQUARE INCHES: N/A	SIZE B / DWG. NO. / SHEET 1 of 2
	NOTES: 1. () INDICATES REFERENCE DIMENSION. 2. ALL TOLERANCES ± .030 UNLESS OTHERWISE SPECIFIED				QTY. REQ'D:	

THIS DRAWING CONTAINS INFORMATION CONFIDENTIAL TO NU-VU Food Service Systems. NO REPRODUCTION OR DISCLOSURE OF ITS CONTENTS IS PERMITTED

M:\Lily\PUC 2 X 3.idw

PUC 3X3 EXTERIOR

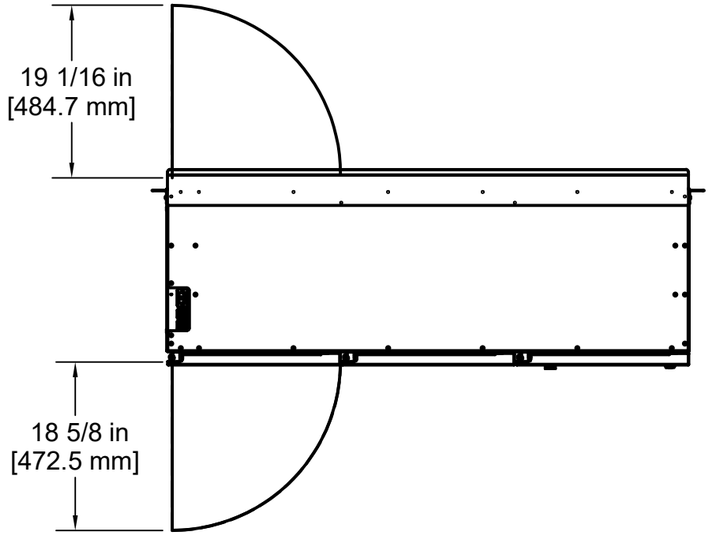

CREW

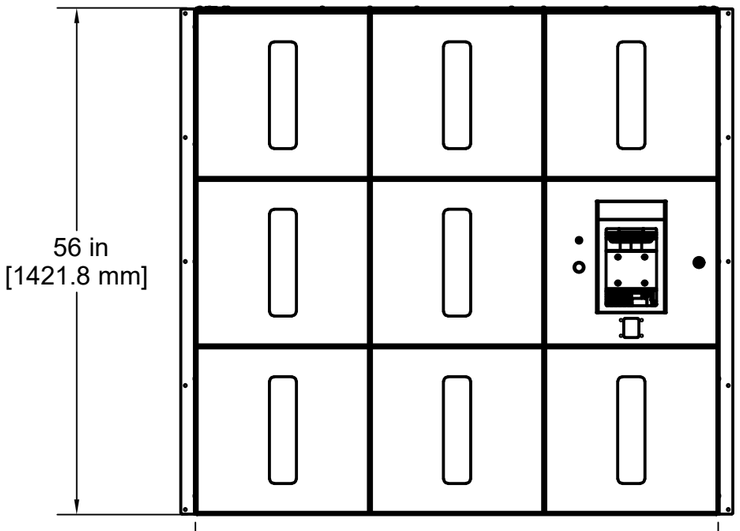

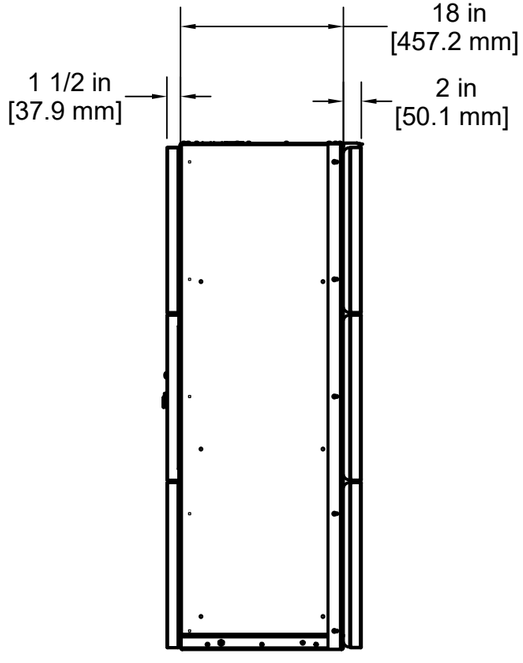

CUSTOMER

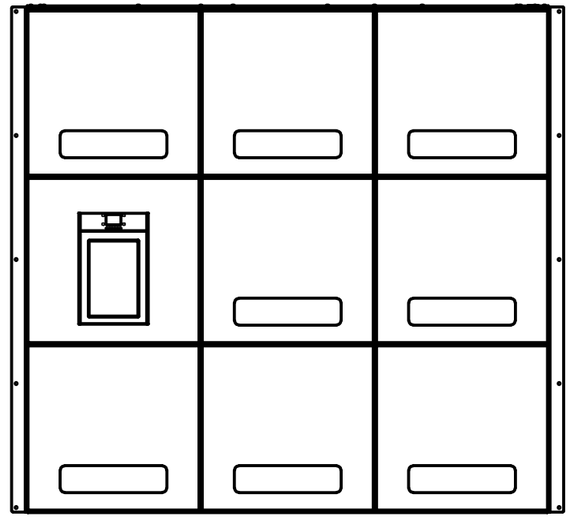

DOYON & NU-VU BAKING EQUIPMENT SPECIALISTS www.doyon.qc.ca • www.nu-vu.com	REV.	DESCRIPTION	CHANGED BY	DRAWN BY: larft	MATERIAL:	NAME:
	A1			CHECKED:	B/A:	
			DATE	DATE: 10/7/2026	SHEAR: N/A X N/A	USED ON:
				SCALE: 1 / 17	SQUARE INCHES: N/A	SIZE B / DWG. NO. / SHEET 2 of 2
	NOTES: 1. () INDICATES REFERENCE DIMENSION. 2. ALL TOLERANCES ± .030 UNLESS OTHERWISE SPECIFIED				QTY. REQ'D:	

THIS DRAWING CONTAINS INFORMATION CONFIDENTIAL TO NU-VU Food Service Systems. NO REPRODUCTION OR DISCLOSURE OF ITS CONTENTS IS PERMITTED

M:\Lily\PUC 3 X 3.idw

PUC 3X3 INDOOR UNIT

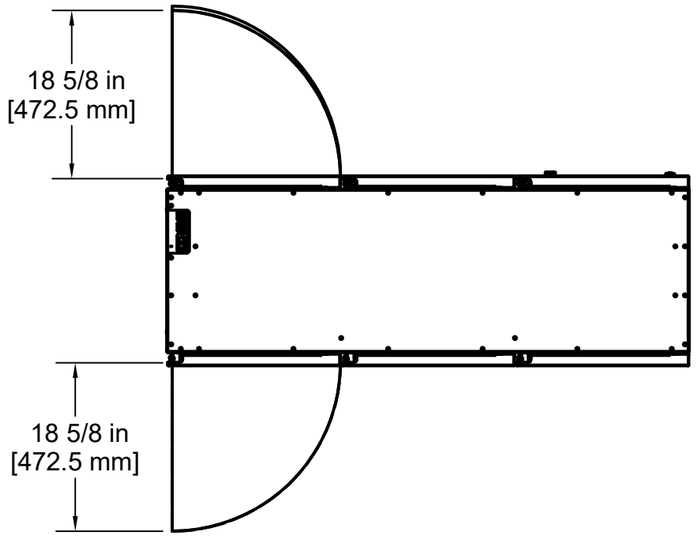

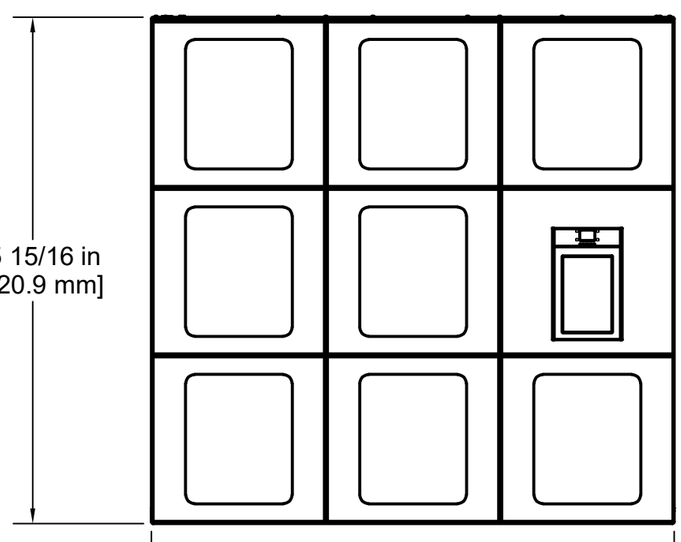

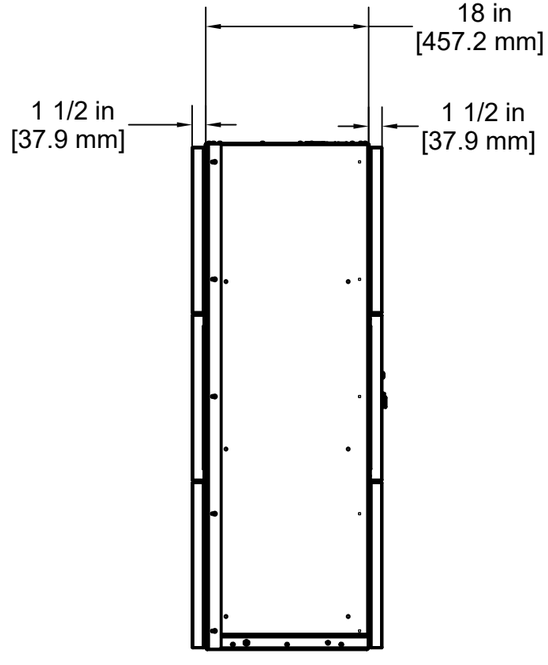

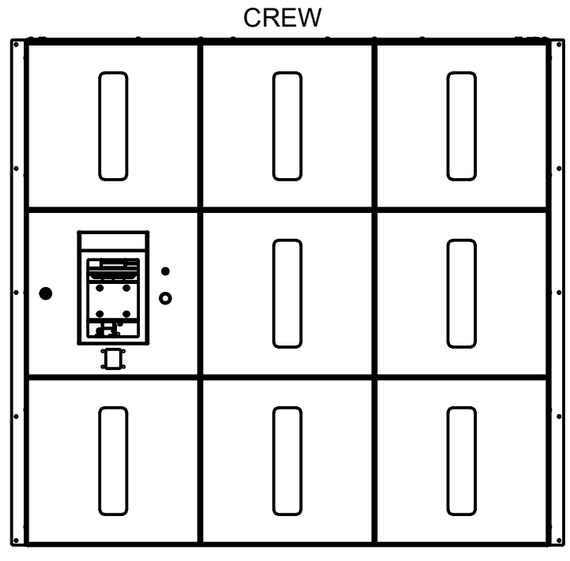

DOYON & NU-VU BAKING EQUIPMENT SPECIALISTS www.doyon.qc.ca • www.nu-vu.com	REV. / DESCRIPTION / CHANGED BY	DRAWN BY: larft	MATERIAL:	NAME:		
	A1	CHECKED:	B/A:			
		DATE: 10/7/2026	SHEAR: N/A X N/A	USED ON:		
		SCALE: 1 / 17	SQUARE INCHES: N/A	SIZE: B	DWG. NO.	SHEET: 1 of 2
	NOTES: 1. () INDICATES REFERENCE DIMENSION. 2. ALL TOLERANCES ± .030 UNLESS OTHERWISE SPECIFIED		QTY. REQ'D:			

THIS DRAWING CONTAINS INFORMATION CONFIDENTIAL TO NU-VU Food Service Systems. NO REPRODUCTION OR DISCLOSURE OF ITS CONTENTS IS PERMITTED

M:\Lily\PUC 3 X 3.idw